Southern Cross University
ePublications@SCU

23rd Australasian Conference on the Mechanics of Structures and Materials

2014

Web crippling studies of Duragal channel sections - ETF and ITF load cases

S Gunalan
Queensland University of Technology

M Mahendran
Queensland University of Technology

Publication details

Gunalan, S & Mahendran, M 2014, 'Web crippling studies of Duragal channel sections - ETF and ITF load cases', in ST Smith (ed.), *23rd Australasian Conference on the Mechanics of Structures and Materials (ACMSM23)*, vol. I, Byron Bay, NSW, 9-12 December, Southern Cross University, Lismore, NSW, pp. 559-564.. ISBN: 9780994152008.

ePublications@SCU is an electronic repository administered by Southern Cross University Library. Its goal is to capture and preserve the intellectual output of Southern Cross University authors and researchers, and to increase visibility and impact through open access to researchers around the world. For further information please contact epubs@scu.edu.au.

23rd Australasian Conference on the Mechanics of Structures and Materials (ACMSM23)
Byron Bay, Australia, 9-12 December 2014, S.T. Smith (Ed.)

WEB CRIPPLING STUDIES OF DURAGAL CHANNEL SECTIONS – ETF AND ITF LOAD CASES

S. Gunalan
Science and Engineering Faculty, Queensland University of Technology
Brisbane, QLD, 4000, Australia. s.gunalan@qut.edu.au

M. Mahendran*
Science and Engineering Faculty, Queensland University of Technology
Brisbane, QLD, 4000, Australia. m.mahendran@qut.edu.au (Corresponding Author)

ABSTRACT

Cold-formed steel members have many advantages over hot-rolled steel members. However, they are susceptible to various buckling modes at stresses below the yield stress of the member because of their relatively high width-to-thickness ratio. Web crippling is one of the failure modes that can occur when the members are subjected to transverse high concentrated loadings and/or reactions. The four common loading conditions are the end-one-flange (EOF), interior-one-flange (IOF), end-two-flange (ETF) and interior-two-flange (ITF) loadings. Recently a new test method has been proposed by AISI to obtain the web crippling capacities under these four loading conditions. Using this test method 38 tests were conducted in this research to investigate the web crippling behaviour and strength of channel beams under ETF and ITF cases. Unlipped channel sections having a nominal yield stress of 450 MPa were tested with different web slenderness and bearing lengths. The flanges of these channel sections were not fastened to the supports. In this research the suitability of the current design rules in AS/NZS 4600 and the AISI S100 Specification for unlipped channels subject to web crippling was investigated, and suitable modifications were proposed where necessary. In addition to this, a new design rule was proposed based on the direct strength method to predict the web crippling capacities of tested beams. This paper presents the details of this experimental study and the results.

KEYWORDS

Cold-formed steel structures, unlipped channel sections, web crippling, design rules, direct strength method.

INTRODUCTION

Cold-formed steel members are becoming increasingly popular in the building industry due to their superior strength to weight ratio and ease of fabrication as opposed to hot-rolled steel members. Among them channel sections are commonly used as bearers of floor systems in residential, industrial and commercial buildings. Thicker channel sections with varying geometry and Duragal Platinum hot-dip zinc aluminium coating are used to suit various requirements including higher moment capacities and longer spans. Figure 1(a) shows the Duragal channel section while Figure 1(b) shows its applications in buildings as joists and bearers. Web bearing is a form of localized failure that occurs at points of transverse concentrated loading or supports of thin-walled steel beams. Cold-formed steel joists and bearers that are unstiffened against this type of loading are vulnerable to web bearing failures (Figure 2). Current cold-formed steel design rules are empirical as they were developed based on extensive testing of many cold-formed steel sections such as C-, Z- and hat sections and built-up sections undertaken since 1940s (Winter and Pian 1946, Khan and Walker 1972, Prabakaran 1993,

This work is licensed under the Creative Commons Attribution 4.0 International License. To view a copy of this license, visit http://creativecommons.org/licenses/by/4.0/

Young and Hancock 2001, Macdonald et al. 2011) for the four web bearing loading conditions (End-One-Flange (EOF), End-Two-Flange (ETF), Interior-One-Flange (IOF) and Interior-Two-Flange (ITF) Loading) shown in Figure 2. This research is aimed at investigating the web crippling behaviour and strength of Duragal channel sections under ETF and ITF load cases and determine the accuracy of currently used design rules. Web crippling tests were undertaken based on the new AISI standard test method (AISI 2008), which states that the specimen length should be at least equal to three times the flat portion of clear web height (d_1) for ETF load case while it should be at least equal to five times d_1 for ITF load case. Experimental web crippling capacities were compared with the predicted web crippling capacities using the current design rules and suitable modifications were proposed where necessary. New design rules were also developed under the direct strength method format.

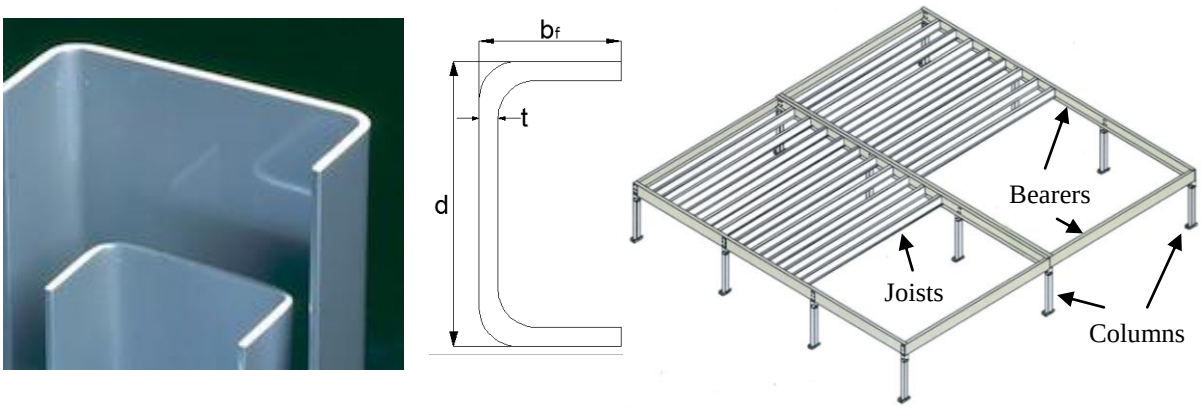

(a) Duragal channel section (b) Floor system

Figure 1. Cold-formed steel floor systems.

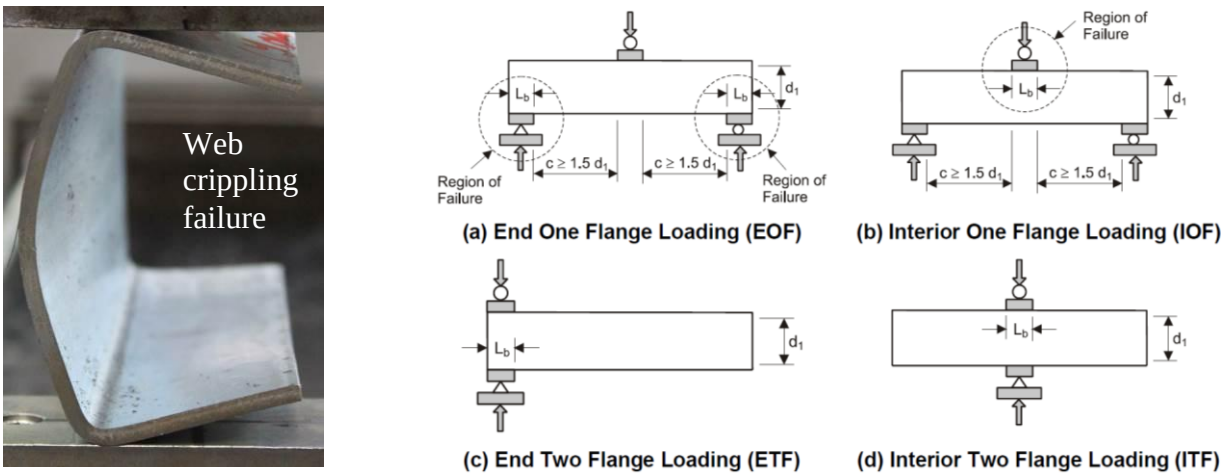

Figure 2. Web crippling failure and loading conditions for bearing tests (AISI 2008).

EXPERIMENTAL STUDY

Thirty eight tests were conducted to investigate the web crippling behaviour of Duragal channel sections under ET and ITF load cases. The flanges of the sections were not fastened to the bearing plates in this experimental study. Table 1 presents the mechanical properties of tested sections while Tables 2 and 3 include their measured external dimensions (d and b_f), thicknesses (t_w), internal radius (r_i) and length (L). Figures 3(a) and (b) show the experimental set-up used in the web crippling tests for ETF and ITF load cases, respectively. Test specimen length and test setup were selected based on the AISI standard test method (AISI 2008). All the specimens were tested using an Instron testing machine to failure. Four different sizes of bearing plates l_b (25, 50, 100 and 150 mm) were used. Two laser displacement transducers were located on the test beam to measure the vertical (flange) and

lateral (web) deflections. Tables 2 and 3 show the web crippling capacities of channel sections as obtained from this experimental study for ETF and ITF load cases, respectively. Tests 1-5 and 20-24 were undertaken to study the effect of specimen length and their results show that the ultimate load increased by 5-10% when the specimen length was increased to the values recommended by the AISI test method. Young and Hancock's (2001) tests were also based on shorter lengths (bearing length plus 1.5 times the section depth) and their results agree with corresponding results in Tables 2 and 3. One of the tests was repeated and the consistency of test results was validated (Tests 17 and 18). Figures 3(a) and (b) show the typical web crippling failure modes under ETF and ITF load cases, respectively. Figure 3(c) shows the failure mode of combined flange crushing and web crippling of channel sections when smaller bearing lengths were used. Such combined flange crushing and web crippling failures were not considered here (see Tables 2 and 3). Figure 4(a) and (b) show the typical load versus deflection curves from the web crippling tests under ETF and ITF load cases, respectively.

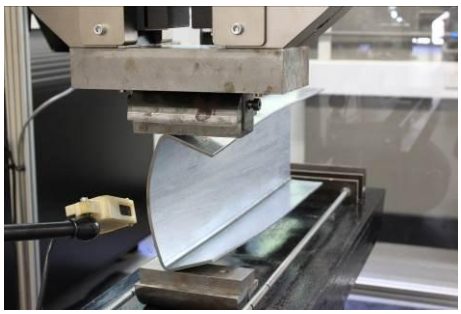

(a) Web crippling - ETF load case

(b) Web crippling - ITF load case

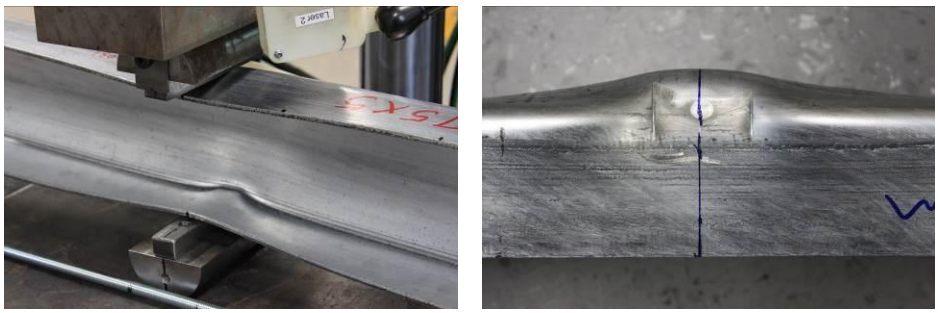

(c) Combined flange crushing and web crippling

Figure 3. Test set-up and failure modes

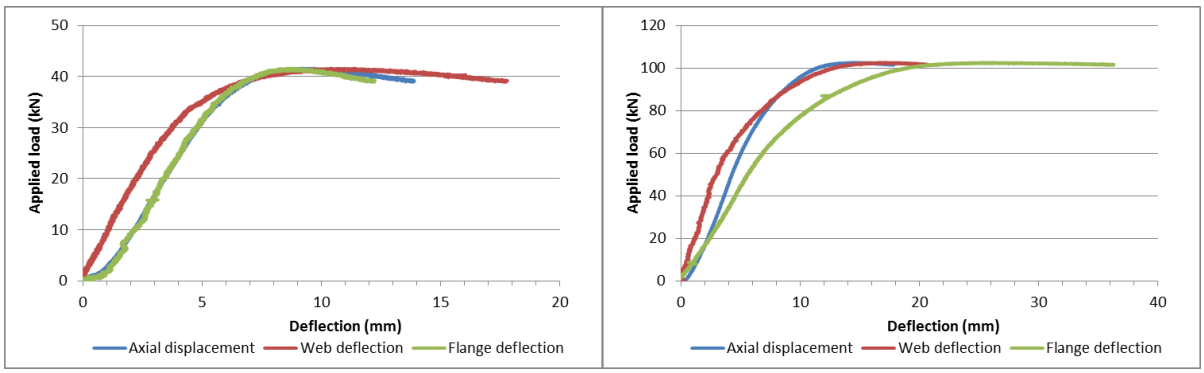

(a) Test 14 (ETF load case) (b) Test 37 (ITF load case)

Figure 4. Typical load versus deflection curves

Table 1. Measured mechanical properties of Duragal channels

Section	250x90x6	200x75x6	200x75x5	150x75x5	125x65x4	100x50x4	75x40x4
f_y (MPa)	470	476	476	468	494	449	480
E (MPa)	200 000						

Table 2. Test specimen details and results for ETF load case

Test	Section	d (mm)	b_f (mm)	t_w (mm)	r_i (mm)	l_b (mm)	L (mm)	Test P_{ult} (kN)	Test/ AS/NZS 4600	Test/ AS/NZS 4600*	Test/ DSM
1	250x90x6	249.0	90.1	6.04	8.0	50	375	48.8	*	*	*
2	250x90x6	252.2	89.8	6.01	8.0	50	501	51.8	*	*	*
3	250x90x6	251.9	89.3	6.02	8.0	50	626	52.4	*	*	*
4	250x90x6	249.4	90.0	6.04	8.0	50	750	50.5	0.87	1.07	1.01
5	250x90x6	251.1	90.1	6.03	8.0	50	1000	51.7	*	*	*
6	200x75x6	198.4	75.1	5.86	8.0	25	600	48.1	#	#	#
7	200x75x6	197.9	74.2	5.87	8.0	50	600	47.7	0.85	1.00	0.98
8	200x75x6	197.7	75.2	5.88	8.0	100	600	53.6	0.78	0.95	0.93
9	200x75x5	198.5	76.1	4.71	4.5	150	600	39.3	0.72	0.93	0.94
10	200x75x5	198.4	76.1	4.70	4.5	50	600	31.3	0.80	0.99	0.98
11	200x75x5	197.2	75.9	4.69	4.5	100	600	35.5	0.75	0.94	0.95
12	150x75x5	152.2	75.1	4.68	4.0	150	451	47.9	0.89	1.08	1.07
13	150x75x5	150.4	75.1	4.67	4.0	50	450	33.7	0.88	1.01	1.03
14	150x75x5	152.0	74.6	4.70	4.0	100	450	41.6	0.87	1.04	1.05
15	125x65x4	125.0	64.9	3.83	4.0	50	375	26.0	0.91	1.08	1.11
16	100x50x4	100.0	50.1	3.78	4.0	100	301	28.1	0.89	1.05	0.99
17	100x50x4	100.1	50.8	3.79	4.0	50	300	22.8	0.90	1.03	1.00
18	100x50x4	100.2	50.4	3.81	4.0	50	300	22.2	0.86	0.98	0.96
19	75x40x4	74.8	39.7	3.79	4.0	50	225	23.8	0.87	0.95	0.94
				Mean					0.85	1.01	1.00
				COV					0.07	0.05	0.05

* Length was not according to AISI standard test method; # Combined flange crushing and web crippling.

Table 3. Test specimens details and results for ITF load case

Test	Section	d (mm)	b_f (mm)	t_w (mm)	r_i (mm)	l_b (mm)	L (mm)	Test P_{ult} (kN)	Test/ AS 4600	Test/ AS 4600*	Test/ DSM
20	250x90x6	251.2	89.6	5.98	8.0	150	750	144.5	*	*	*
21	250x90x6	249.2	90.7	5.99	8.0	150	875	154.0	*	*	*
22	250x90x6	250.4	90.1	6.02	8.0	150	1000	157.1	*	*	*
23	250x90x6	251.6	91.2	6.01	8.0	150	1250	160.5	0.94	1.03	1.00
24	250x90x6	250.4	90.4	6.01	8.0	150	1500	164.8	*	*	*
25	200x75x6	198.1	74.5	5.97	8.0	150	1000	154.8	0.87	0.97	0.93
26	200x75x6	200.8	75.7	5.88	8.0	100	1000	152.0	0.99	1.03	1.03
27	200x75x5	197.1	74.7	4.70	4.5	150	1000	105.0	0.75	0.99	1.00
28	200x75x5	201.5	75.9	4.70	4.5	50	1000	97.0	#	#	#
29	200x75x5	199.1	75.1	4.68	4.5	100	1000	101.7	0.86	1.04	1.06
30	150x75x5	149.1	75.1	4.66	4.0	25	750	96.9	#	#	#
31	150x75x5	149.5	75.1	4.68	4.0	50	750	100.0	#	#	#
32	150x75x5	152.5	75.0	4.66	4.0	100	750	102.5	0.81	1.02	1.04
33	125x65x4	123.3	64.6	3.84	4.0	100	625	72.5	0.82	1.01	1.01
34	125x65x4	123.8	64.8	3.80	4.0	50	625	73.7	#	#	#
35	100x50x4	100.1	50.5	3.81	4.0	100	499	66.1	0.82	1.01	0.95
36	100x50x4	99.8	49.7	3.79	4.0	50	500	62.9	0.93	1.05	1.07
37	100x50x4	100.2	50.0	3.82	4.0	25	500	62.1	#	#	#
38	75x40x4	75.9	39.8	3.80	4.0	50	375	59.3	0.79	0.90	0.93
				Mean					0.86	1.00	1.00
				COV					0.09	0.04	0.05

* Length was not according to AISI standard test method; # Combined flange crushing and web crippling.

DESIGN RULES

AS/NZS 4600 (SA 2005)

In this study, the design rules proposed by AS/NZS 4600 (SA 2005) and AISI S100 (AISI 2007) were considered for the web crippling capacity of channel sections. However, the design rules in AS/NZS 4600 are identical to those in AISI S100, and hence only AS/NZS 4600 design rules are discussed in this paper. Equation 1 shows the design equation given in AS/NZS 4600 for the web crippling capacity of channel sections (R_b).

$$R_b = Ct_w^2 f_y \sin\theta \left(1 - C_r\sqrt{\frac{r_i}{t_w}}\right)\left(1 + C_l\sqrt{\frac{l_b}{t_w}}\right)\left(1 - C_w\sqrt{\frac{d_1}{t_w}}\right) \tag{1}$$

where C is a coefficient, t_w is thickness of web, f_y is yield stress, θ is angle between the plane of the web and the plane of the bearing surface, C_r, C_l and C_w are the coefficients of inside bent radius, bearing length and web slenderness, respectively, r_i is inside bent radius, l_b is bearing length, d_1 is depth of the flat portion of the web measured along the plane of the web. All the required coefficients from AS/NZS 4600 for unfastened channel sections are listed in Table 4.

Experimental ultimate web crippling capacities under ETF and ITF load cases are compared in Tables 2 and 3 with the predictions from the design equations based on AS/NZS 4600 (SA 2005). This shows that AS/NZS 4600 design equations are unconservative for channel sections under ETF and ITF load cases. Since the currently available web crippling capacity equations are unconservative for ETF and ITF load cases, new coefficients (C, C_r C_l and C_w) are proposed to predict the web crippling capacities of channel sections based on experimental results. Table 4 shows the proposed web crippling coefficients while Tables 2 and 3 show the comparison of test results with new predictions. This shows that the web crippling capacities predicted by the proposed equation (Eq. 1 with proposed coefficients) agree well with the experimental web crippling capacities of unfastened channel sections.

Table 4. Original and proposed coefficients for AS/NZS 4600

Load case	Coefficients	C	C_r	C_l	C_w	Mean	COV
ETF	AS/NZS 4600	2	0.11	0.37	0.01	0.85	0.07
	Proposed	2.9	0.19	0.26	0.05	1.01	0.05
ITF	AS/NZS 4600	13	0.47	0.25	0.04	0.86	0.09
	Proposed	11	0.21	0.07	0.03	1.00	0.04

Direct Strength Method

The direct strength method (DSM) is an alternative to the traditional effective width method and has been adopted as an alternative design procedure in AS/NZS 4600 and AISI S100. However, no formal provisions for web crippling currently exist for the DSM. Hence suitable design rules for the web crippling capacity of unlipped channel sections were developed under the DSM format. Eqs. 2 and 3 show the proposed DSM design equations for the web crippling capacity of unlipped channel sections under ETF and ITF load cases, respectively. In these equations the DSM based nominal web crippling capacity (P_u) is proposed using P_{cr} (elastic buckling capacity in web crippling) and P_y (web yield capacity). The buckling loads (P_{cr}) can be calculated using Eq.(4), where the buckling coefficients for the ETF and ITF load cases were considered approximately as 1 and 2, respectively based on numerical studies. In order to obtain accurate buckling coefficients of unlipped channel sections under ETF and ITF load cases, detailed finite element analyses will be carried out. Experimental ultimate web crippling capacity results were processed within the DSM format and are shown in Figures 5(a) and (b) for ETF and ITF load cases, respectively, where the slenderness (λ) was calculated using Eq. 5. These figures show the non-dimensional web crippling capacity curves for unlipped channel sections and compare them with experimental results. It can be seen that the proposed DSM equations predict the web crippling capacities of unlipped channel sections reasonably well.

$$\frac{P_u}{P_y} = 0.187\left[1 - 0.04\left(\frac{P_{cr}}{P_y}\right)^{0.5}\right]\left(\frac{P_{cr}}{P_y}\right)^{0.5} \quad \text{with } P_y = f_{yw}t_w\left(l_b + \frac{d_1}{2}\right) \quad \text{for ETF load case} \tag{2}$$

$$\frac{P_u}{P_y} = 0.283\left[1 - 0.04\left(\frac{P_{cr}}{P_y}\right)^{0.5}\right]\left(\frac{P_{cr}}{P_y}\right)^{0.5} \quad \text{with } P_y = f_{yw}t_w(l_b + d_1) \quad \text{for ITF load case} \tag{3}$$

$$P_{cr} = \frac{\pi^2 Ek\ t_w^{\ 3}}{12\left[1-\upsilon^2\right]d} \tag{4}$$

$$\lambda = \sqrt{\frac{P_y}{P_{cr}}} \tag{5}$$

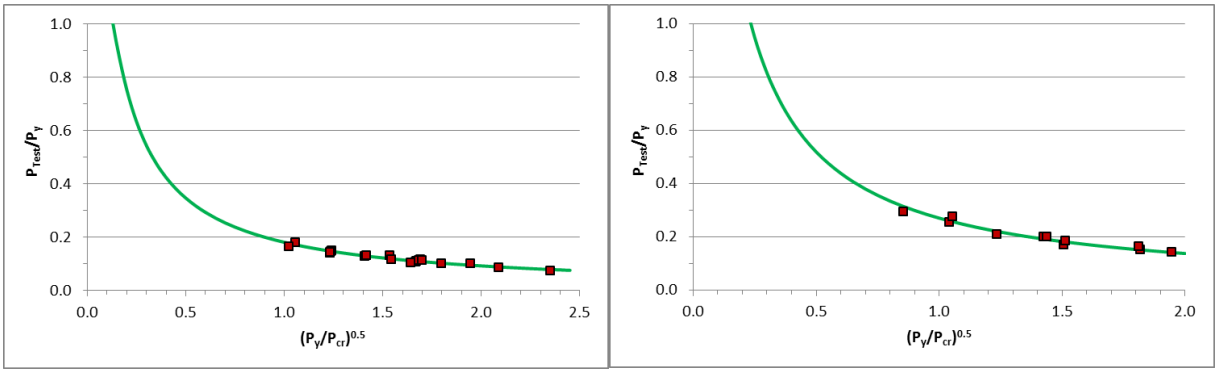

(a) ETF load case (b) ITF load case

Figure 5. Direct strength method based design

CONCLUSIONS

This paper has presented the details of an experimental study of 38 web crippling tests of Duragal channel sections under ETF and ITF load cases. Comparison of the ultimate web crippling capacities from tests showed that AS/NZS 4600 (SA, 2005) and AISI S100 (AISI, 2007) design equations are unconservative for these unlipped channel sections under ETF and ITF load cases. Hence new design equations were proposed within AS/NZS 4600 (SA, 2005) and AISI S100 (AISI, 2007) guidelines to accurately predict the web crippling capacities of unlipped channel sections based on test results. Suitable design rules for the web crippling capacities of unlipped channel sections were also developed under the direct strength method format.

REFERENCES

American Iron and Steel Institute (AISI) (2007) "Specifications for the cold-formed steel structural members", *Cold-formed Steel Design Manual*, Washington DC, USA.

American Iron and Steel Institute (AISI) (2008) TS-9-05 "Standard test method for determining the web crippling strength of cold-formed steel beams", USA.

Khan, M.Z. and Walker, A.C. (1972) "Buckling of plates subjected to localized edge loading", *The Structure Engineer*, Vol. 50, pp. 225-232.

Macdonald, M., Heiyantuduwa Don, M. A., Kotelko, M., and Rhodes, J. (2011) "Web crippling behaviour of thin-walled lipped channel beams", Thin-Walled Structures, Vol. 14, pp. 682-690.

Prabakaran, K. (1993) "Web crippling of cold-formed steel sections", *Project Report*, Department of Civil Engineering, University of Waterloo, Waterloo, Ontario, Canada.

Standards Australia (SA) (2005) *Cold-formed Steel Structures*, AS/NZS 4600, Sydney, Australia.

Winter, G. and Pian, R.H.J. (1946) "Crushing strength of thin steel webs, Engineering Experiment", *Cornell Bulletin 35 Part 1*, Cornell University, Ithaca, NewYork.

Young, B. and Hancock, G.J. (2001) Design of cold-formed channels subjected to web crippling, Journal of Structural engineering, Vol. 127, pp.1137-1144.