Southern Cross University
ePublications@SCU

School of Environment, Science and Engineering Papers

School of Environment, Science and Engineering

2002

The LOG corer: a new device for obtaining short cores in soft lacustrine sediments

Christopher M. Lane
University of Tasmania

Kathryn H. Taffs
Southern Cross University

Publication details

Post-print of: Lane, CM & Taffs, KH 2002, 'The LOG corer: a new device for obtaining short cores in soft lacustrine sediments', *Journal of Paleolimnology*, vol. 27, no. 1, pp. 145-150.
The original publication is available at www.springerlink.com at http://dx.doi.org/10.1023/A:1013547028068

ePublications@SCU is an electronic repository administered by Southern Cross University Library. Its goal is to capture and preserve the intellectual output of Southern Cross University authors and researchers, and to increase visibility and impact through open access to researchers around the world. For further information please contact epubs@scu.edu.au.

Lane, C.M. and Taffs, K.H. (2002). The LOG corer – a new device for obtaining short cores in soft lacustrine sediments.. Journal of Palaeolimnology, 27 (1):145 – 150.

Note

The LOG corer - a new device for obtaining short cores in soft lacustrine sediments

Christopher M. Lane[1] & Kathryn H. Taffs[2]

[1]*Institute of Antarctic and Southern Ocean Studies (IASOS), University of Tasmania, GPO Box 252-77, Hobart, TAS 7001, Australia (E-mail: markl@postoffice.utas.edu.au)*

[2]*School of Resource Science and Management, Southern Cross University, PO Box 157, Lismore, NSW 2480, Australia (E-mail: ktaffs@scu.edu.au)*

Keywords: coring equipment, lakes, paleolimnology, sediments, lacustrine

Abstract

A wide variety of scientific disciplines require representative samples of benthic sediment. As a result, a large range of sampling devices have been developed, each best suited to a particular set of conditions. However, all sediment sampling devices have inherent design problems that affect the degree to which samples represent the intact sediment. These issues are summarised, and a new corer design (the LOG corer) is presented and discussed. The LOG corer is a remotely-operated light-weight gravity corer suitable for obtaining relatively undisturbed short sediment cores in soft lacustrine sediments.

Introduction

Representative benthic sediment samples are required by many disciplines within the environmental sciences. Benthic samples are used to provide information on a variety of indicators, and can be utilised to determine past and present environmental conditions, including pollution history, aquatic food web structures and hydrological regimes (Wilson et al., 1997: Clerk et al., 2000; Birks et al, 2000).

To be meaningful, benthic sediment samples obtained for scientific studies must be representative of the sediment features under investigation. In some studies, such as those examining chronological sequences, it will be important that stratification is preserved throughout the sampling process. However, if the purpose is to sample benthic macrofaunal abundance, a homogenised sample may be equally acceptable (Rutledge & Fleeger, 1988).

Considering the range of study objectives, sampling requirements, and site conditions, it is not surprising that a wide variety of benthic sediment sampling devices exist. However, each sampler design has its own advantages and disadvantages, and there are problems inherent in the design of all sampling devices. It is essential that field workers are aware of the problems that may be encountered with particular sampling devices, and the way in which their study results may be affected by these problems (McCoy, 1980). This paper summarises some of the problems inherent in sampler design, and presents a new sampler which is suitable for obtaining short cores in soft organic sediments.

Problems encountered due to corer design

There are a number of problems associated with the design of coring devices that directly affect the degree to which retrieved samples accurately represent the intact benthic sediment. These problems are best discussed in terms of their effect upon retrieved samples.

Contamination and disturbance of the sediment or water obtained in the sample can occur in samplers that do not adequately seal at both the top and bottom of the coring chamber. This is particularly a problem with benthic grab samplers, for two reasons. Steel mesh used on the upper side of the sampler allows water to flow through the sampler (designed to reduce bow-wave effects during descent: Wigley, 1967), and there is eventual deterioration of the edges where the steel jaws meet, which may allow sediment and water to escape (Murray & Murray, 1987). However, corer designs which prevent a free-flow of water through the coring chamber (during its descent) result in the creation of a hydraulic bow-wave, which displaces surficial sediments before the corer reaches the bottom (Crusius & Anderson, 1991; Wright, 1993).

Redistribution and resuspension of the sediment enclosed within the coring chamber can result from shear stress, caused by rotation of the sampling chamber during the retrieval process. Shear stress causes strain parallel to the direction of the movement, and soft surficial sediments in the chamber are particularly vulnerable to this type of disturbance. The amount of disturbance is increased with sample area, and is therefore reduced in corers with narrow sampling chambers (Blomqvist, 1991).

Core shortening can also occur, primarily as a result of internal friction as the sediment moves up the tube during corer penetration (Hongve & Erlandsen, 1979; Wright,

1993; Jahnke & Knight, 1997). The internal friction 'shears' sediment from the edge of the sample, reducing the volume of sample as it moves through the tube (Emery & Hülsemann, 1964; Blomqvist, 1991). This friction also results in smearing of the sediment against the internal walls of the sampling chamber (Blomqvist, 1991), which contributes to contamination of the sample and reduces preservation of sediment lamination (Chant & Cornett, 1991). Core shortening can also occur from displacement of the sediment as the corer penetrates the sediment, resulting in the formation of a compacted bulbous cone (or 'plug') of sediment either in front of, or within, the corer (McCoy, 1980). Sediment deformation and compaction caused by frictional resistance can be reduced by smooth internal core walls, a sharp end to the core tube to reduce frictional resistance (Mudroch & MacKnight, 1991), and by using a reduced penetration speed and a larger diameter corer (Martin & Miller, 1982; Wright, 1993).

Core length can be expanded, and sediment disturbed, by the expansion of entrained gas in the sediment as cores are brought to the surface (Wright, 1980; Lotter et al., 1997). Expansion of gases within the sediment can occur in response to the decreasing pressure associated with reducing depth, or from the effects of increased temperature on gases (such as methane) within the sediment (Lotter et al., 1997). This effect may be more pronounced in sediments of high organic matter and porosity (Lotter et al., 1997), but is overcome by the use of freeze corers (Wright, 1980; Miskimmin et al., 1996).

Core lengthening can also occur in piston corers from 'flow-in', a process whereby the piston moves up at a greater rate than the downward penetration of the corer, causing material to be drawn into the core pipe (McCoy, 1980; Buckley et al., 1994). Flow-in results in vertical smearing and destruction of the stratigraphic integrity of portions of the recovered core (McCoy, 1980; 1985). However, the predominance of flow-in occurring at the base of

piston cores may suggest that greatest disturbance is created by piston displacement during pull-out (McCoy, 1980). Flow-in can also occur throughout the length of the core, and this is presumed to be the result of piston 'sticking' or cable rebound (McCoy, 1980; Buckley et al., 1994). Buckley et al. (1994) report recovering cores with as much as 1.3 m of discernible sediment flow-in (core length 7.0 m).

Tilting of the corer during penetration of the sediment can occur with all types of coring devices, and must be minimised so that the sediment sample obtained accurately provides a vertical sediment profile. The use of a supporting frame, lowered to the benthic surface and used to guide the corer, is a common technique for ensuring that a vertical position is maintained during the coring process (Dokken et al., 1979; Glew, 1995; Gerber et al., 1996). Sediment disturbance during removal of the sample from the sampling chamber must also be minimal.

The extent of sampling bias that occurs when obtaining cores will largely be a result of the choice of corer design, and the appropriateness of its use. Many authors have questioned the validity of results obtained in studies because of the sampling bias associated with the coring device used (Baxter et al., 1981; Blomqvist, 1985; Buckley et al., 1994). The trade off between corer choice and acceptable bias is thus an important consideration, and must be weighed carefully before field sampling.

A new corer design

A new corer has been designed and built to solve the specific problems encountered in a diatom study in two coastal dune lakes, eastern Australia. The study required collection of small, relatively undisturbed samples of the top 2 cm of accumulated sediment in the deepest

part of each lake (approximately 11 m in depth) to determine the fossil diatom assemblage accumulated over the past several years. A sampling device suitable for this study was not available in our laboratories. Hence it was necessary to design and construct a purpose-built coring device.

Description of corer and operation

The corer (Figure 1) is fundamentally a Light-weight Open-barrel Gravity corer – abbreviated to the 'LOG' corer. The LOG corer consists of a square steel tube, cut at an angle of 45° at each end, fitted with spring-loaded trap doors, and fixed to a sharpened steel rod. The steel rod provides vertical stability once the corer has penetrated the sediment, protects the trap doors from possible damage caused by striking hard substrata, and is fixed at a distance from the sampling chamber to minimise sediment disturbance during penetration. Size and weight specifications are listed in Table 1.

Two lines are used to operate the LOG corer. Using the main line (which is attached directly over the centre of mass of the corer), the corer is lowered gently (in the 'open' position) to within 1 - 2 m from the bottom, from where it is allowed to free fall into the sediment. After corer penetration of the sediment, the latch mechanism is remotely released by gently tugging on the attached second line, thus allowing the spring tension to close the trap doors. The corer is then retrieved to the surface at approximately 1 m sec^{-1} using the main line to support the corer weight (a 6 mm nylon anchor rope is used for the main line attached to the corer, while a bricklayers line was found to work well for activating the release mechanism).

Sediment is removed through the top of the coring chamber by inserting an extruding rod through the base of the chamber and pushing the core to the top of the tube. The extruding rod consists of a 65 cm length of 10 mm dowel with a thin, rubber-coated steel plate attached to the end to fit tightly inside the coring chamber. Before inserting the extruding rod, the angled section of sediment in the base of the chamber can be removed with a flat blade to minimise sediment distortion during the extrusion process. If the lower angled section of the sediment core is not removed, the lower 2.5 cm of the sediment core needs to be discarded after extrusion because it is distorted when the extruding rod up is pushed against it. Use of the extruding rod also allows the overlying water and saturated uppermost layers of soft sediments to be collected (by siphoning, funnelling or pippetting) as the core is extracted (a 50ml syringe was found to work well for this).

Although the corer was constructed from second-hand and recycled materials immediately available, the total cost of purchasing the necessary materials new is estimated to be less than US$30. However, any future construction of this type of corer should ideally use marine-grade stainless steel or brass, to reduce the possibility of sample contamination and increase durability of the device. Aluminium is considered to be too light for use in this design, as the weight of the corer is an essential component of its effective penetration. A local engineering company (Readings Engineering, Lismore, NSW) estimated their price for manufacturing an identical corer out of stainless steel to be approximately US$300, or slightly more if made of brass. The corer design is therefore relatively inexpensive to professionally manufacture from high-grade materials.

Sampling outcomes

The LOG corer has been successfully used to retrieve more than 30 short cores from soft lacustrine sediments. The corer is not, however, effective in very coarse or highly consolidated sediments, due to its small size, light weight, and trap-door design.

Water flow through the corer is not impeded during descent, as the coring chamber is hollow and not obstructed. The problem which often results from the hydraulic bow-wave in front of corers is therefore minimised in this design. Samples are protected from disturbance by overlying waters and from sediment loss during retrieval, as the chamber is securely sealed by both top and bottom trap doors. Sediment disturbance during removal of the sample from the coring chamber is minimised by the smooth interior walls of the chamber, the short core length, and the use of the tightly fitting extruding rod.

The average minimum depth of free-fall required to obtain core samples of 10 to 15 cm length in the soft sediments sampled was 1 m. The corer can thus be operated at slow descent speeds and short depths, minimising core disturbance and smearing of the sample against internal core walls from friction. However, the addition of weight to the outside of the coring tube may allow the corer to be lowered into the sediment rather than to freefall, and this would reduce sediment disturbance caused by the components mounted ahead of the coring tube (i.e. trap door and steel rod).

The surficial layers in the core appeared to be relatively undisturbed by the coring and retrieval procedures, and only slight smearing of the outermost layer was visible on the extracted cores. In cores taken from the photic zone, a fine film of algal growth was evident

on the top of the sediment as the core was pushed to the top of the tube, indicating that the surficial layer was relatively undisturbed.

Core shortening was < 5%, as determined by comparing the length of the retrieved core to the mud-line on the exterior of the corer wall (a method used by McCoy, 1980; Kuehl et al., 1985). For these comparisons, the core was carefully extruded by opening the bottom door on the corer, removing the angled section of sediment, then pushing the extruding rod upwards through the coring tube with the top door open. Comparisons were then made between the length of the extracted core and the mud line on the shortest side of the coring chamber. Shortening of this extent is insignificant for most benthic studies.

Stratigraphic integrity was inspected by dissecting the cores along their length using a sharp blade. Variations in the sediment colour and consistency with depth appeared to be generally horizontally orientated across the core, rather than being curved downward toward the exterior of the core, indicating that stratigraphic features were relatively undisturbed.

Tilting of the corer during and after penetration of the sediment is minimised, as the corer naturally descends in a vertically upright position due to its design, and the deeper penetration by the steel rod maintains vertical stability once the sediment has been penetrated. Rotation of the sampler during retrieval is minimal, as determined by the untangled condition of the two operating lines during retrieval.

The coring device is lightweight, easy to operate by one person from a small boat, durable, and inexpensive to build. This corer design also has the potential to double as a water sampler with minimal modifications. The free flow of water through the sampler during

descent, combined with the ability to seal both ends of the sampling chamber at any given depth, means that water samples of a known volume could be retrieved from a pre-determined depth. Rubber 'sleeves' could readily be fitted over the existing corer doors to provide a perfectly water-tight seal for water sampling. The design of this sampler may also be applied to the slightly larger sizes required for many benthic sampling studies.

Limitations

Use of the LOG corer is limited to fine-grained soft sediments, such as those commonly found in lacustrine environments. Although the corer worked well at depths of up to 11 m in the lakes studied, there may be an increased chance of the operating lines becoming entangled at considerably greater depths (for example, if the corer rotates due to currents). However, the use of dual lines has not presented any difficulties in the field work undertaken to date, was easily managed by one person from a boat, and has been used on other corers (Miskimmin et al., 1996).

Sediment at the very base of the coring chamber is disturbed by the angled closure of the doors against the base of the core tube. Therefore, the lower 2.5 cm of the sediment sample should be excluded when accurate quantitative data are required.

Conclusions

There are many factors that influence the level of sampling bias that occurs when obtaining benthic sediment samples. The study objectives, sampling requirements and site conditions determine the level of bias acceptable within any study. There are a wide variety of sampler types available, most of which are designed for specific conditions and retrieve different types of samples. Each coring device produces an individual bias. It is important that field workers

are well aware of the handling characteristics and limitations of a particular device they are using prior to field sampling.

The design of new coring devices increases the range of sampling techniques available to researchers, thereby improving the efficiency and accuracy with which representative samples can be obtained. The LOG corer is a portable, robust and effective coring device for obtaining representative samples from soft lacustrine sediments. Thus, this design is a valuable addition to the vast array of models already available, which together serve to increase the level of accuracy possible in benthic sediment sample studies.

Achnowledgements

We gratefully acknowledge the assistance of Peter A. Lane in the design and construction of the LOG corer.

References

Baxter, M. S., J. G. Farmer, I. G. McKinley, D. S. Swan & W. Jack, 1981. Evidence of the unsuitability of gravity coring for collecting sediment in pollution and sedimentation rate studies. Envir. Sci. Technol 15: 843-846.

Birks, H. H., R. W. Battarbee, H. J. B. Birks, with contributions by E. G. Bradshaw, S. J. Brooks, C. A. Duigan, V. J. Jones, G. Lemdahl, S. M. Peglar, J. O. Solem, I. W. Solhøy, T. Solhøy & M. K. Stalsberg, 2000. The development of the aquatic ecosystem at Kråkenes Lake, western Norway, during the late-glacial and early-Holocene – a synthesis. J. Paleoloim. 23: 91-114.

Blomqvist, S., 1985. Reliability of core sampling of soft bottom sediment - an in situ study. Sedimentology 32: 605-612.

Blomqvist, S., 1991. Quantitative sampling of soft-bottom sediments: problems and solutions. Mar. Ecol. Prog. Ser. 72: 295-304.

Buckley, D. E., W. G. MacKinnon, R. E. Cranston & H. A. Christian, 1994. Problems with piston core sampling: Mechanical and geochemical diagnosis. Mar. Geol. 117: 95-106.

Chant, L. J. & R. J. Cornett, 1991. Smearing of gravity core profiles in soft sediments. Limnol. Oceanogr. 36: 1492-1498.

Crusius, J. & R. F. Anderson, 1991. Core compression and surficial sediment loss of lake sediments of high porosity caused by gravity coring. Limnol. Oceanogr. 36: 1021-1031.

Dokken, Q. R., R. C. Circé & C. W. Holmes, 1979. A portable, self supporting, hydraulic vibracorer for coring submerged, unconsolidated sediments. J. Sed. Petrol. 49: 657-659.

Emery, K. O. & J. Hülsemann, 1964. Shortening of sediment cores collected in open barrel gravity corers. Sedimentology 3: 144-154.

Gerber, H. W., H. U. Oebius & B. Grupe, 1996. MAXICORER. A device for taking undisturbed samples of sediment including the benthic boundary layer. Sea Technol. 37: 66-69.

Glew, J. R., 1995. Conversion of shallow water gravity coring equipment for deep water operation. J. Paleolim. 14: 83-88.

Hongve, D. & A. H. Erlandsen, 1979. Shortening of surface sediment cores during sampling. Hydrobiologia 65: 283-287.

Jahnke, R. A. & L. H. Knight, 1997. A gravity-driven, hydraulically-damped multiple piston corer for sampling fine-grained sediments. Deep Sea Res. 44: 713-718.

Kuehl, S. A., C. A. Nittrouer, D. J. De Master & T. B. Curtin, 1985. A long square-barrel gravity corer for sedimentological and geochemical investigation of fine-grained sediments. Mar. Geol. 62: 365.

Lotter, A. F., J. Merkt & M. Sturm, 1997. Differential sedimentation versus coring artefacts: a comparison of two widely used piston-coring methods. J. Paleolim. 18: 75-85.

Martin, E. A. & R. J. Miller, 1982. A simple, diver-operated coring device for collecting undisturbed shallow cores. J. Sed. Petrol. 52: 641-642.

McCoy, F. W., 1980. Photographic analysis of coring. Mar. Geol. 38: 263-282.

McCoy, F. W., 1985. Mid-core flow-in: Implications for stretched stratigraphic sections in piston cores. J. Sed. Petrol. 55: 608-610.

Miskimmin, B. M., P. J. Curtis, D. W. Schindler & N. Lafaut, 1996. A new hammer-driven freeze corer. J. Paleolim. 15: 265-269.

Mudroch, A. & S. D. MacKnight, 1991. Bottom sediment sampling. In Mudroch, A., & S. D. MacKnight (editors), Handbook of techniques for aquatic sediments sampling. CRC Press, Boston. pp. 29-95.

Murray, W. G. & J. W. Murray, 1987. A device for obtaining representative samples from the sediment-water interface. Mar. Geol. 76: 313-317.

Rutledge, P. A. & J. W. Fleeger, 1988. Laboratory studies on core sampling with application to subtidal meiobenthos collection. Limnol. Oceanogr. 33: 274-280.

Wigley, R. L., 1967. Comparative efficiency of Van Veen and Smith-McIntyre grab samplers as revealed by motion pictures. Ecology 48: 168.

Wilson, S. E., J. P. Smol & D. J. Sauchyn, 1997. A Holocene paleosalinity diatom record from southwestern Saskatchewan, Canada: Harris Lake revisited. J. Paleolim. 17: 23-31.

Wright, H. E., Jr., 1980. Coring of soft lake sediments. Boreas 9: 107-114.

Wright, H. E., Jr., 1993. Core compression. Limnol. Oceanogr. 38: 699-701.

Table 1: LOG corer specifications

Feature	**Specifications**
Weight	1050 g
Total length	60 cm
Maximum diameter	9 cm
Coring chamber	
- External diameter	2.5 cm
- Internal diameter	2.1 cm
- Length	36 cm

Figure 1: Side view of the LOG corer in the ‘open’ position (during descent).

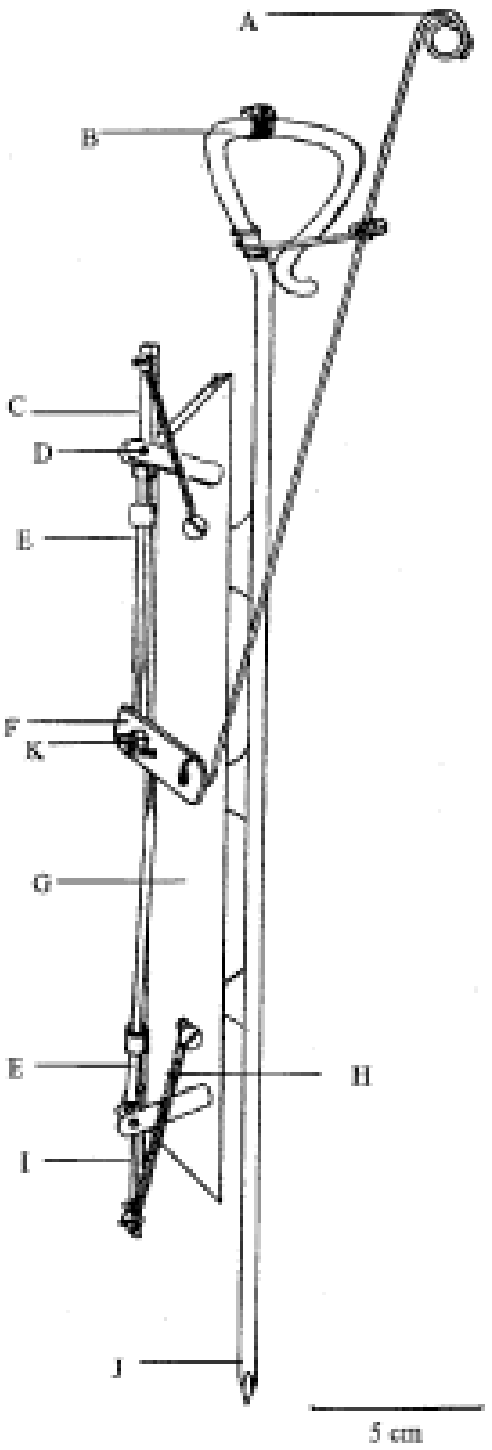

Legend (Figures 1 to 4)

A - Lever operating wire, and attachment point for the lever activating line.

B - Steel rod, and attachment point for the main line to lower and retrieve the corer.

C -Top hinged door.

D – Door hinge rod - welded to the door, & rotates through the side supporting brackets.

E - Operating rod, moved by the lever (F). In the ‘open’ position, the rods are moved toward the ends of the corer, across the base of the doors to hold them open (Figure 1).

F - Lever mechanism, operated by the second line after sediment penetration.

G- Coring chamber.

H- Extension spring, used to close the doors.

I - Bottom door.

J - The base of the steel rod protects the doors from damage by hard substrates, and provides additional vertical stability.

K - Bolt (welded to the coring chamber) and nut, on which the lever pivots.